JIANGSU CHANGJING ELECTRONICS TECHNOLOGY CO., LTD

TO-220-3L/TO-220F-B Plastic-Encapsulate Diode

SBD40H100CTB、SBDF40H100CTB

SCHOTTKY BARRIER RECTIFIER

MAIN CHARACTERISTICS

I_O	40 (20×2) A
V_{RRM}	100 V
T_j	175 ℃
$V_{F(typ)}$	0.66V (@Tj=150℃)

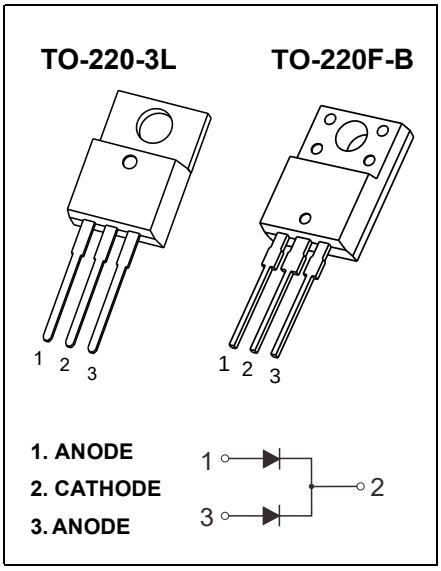

FEATURES

- Low Power Loss,High Efficiency
- Guard Ring Die Construction for Transient Protection
- High Current Capability and Low Forward Voltage Drop

MARKING

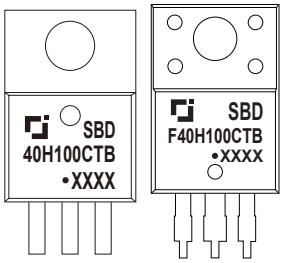

SBD(F)40H100CTB = Device code
Solid dot = Green molding compound device
if none, the normal device
XXXX = Code

MAXIMUM RATINGS (T_a=25℃ unless otherwise noted)

Symbol	Parameter	SBD 40H100CTB	SBD F40H100CTB	Unit
V_{RRM}	Peak repetitive reverse voltage	100		V
V_{RWM}	Working peak reverse voltage			
V_R	DC blocking voltage			
$V_{R(RMS)}$	RMS reverse voltage	70		V
I_O	Average rectified output current	40		A
I_{FSM}	Non-Repetitive peak forward surge current (8.3ms half sine wave)	300		A
$R_{\Theta Jc}$	Thermal resistance from junction to case ,Tc=25℃	2.0	3.0	℃/W
$R_{\Theta JA}$	Thermal resistance from junction to ambient	75		℃/W
T_j	Junction temperature	175		℃
T_{stg}	Storage temperature	-55~+175		℃

ELECTRICAL CHARACTERISTICS (T_a=25℃ unless otherwise specified)

Parameter	Symbol	Test conditions		Min	Typ	Max	Unit
Reverse voltage	$V_{(BR)}$	I_R=0.1mA		100			V
Reverse current	I_R	V_R=100V	Tj =25℃		0.13	1.0	uA
			Tj =150℃		0.80		mA
Forward voltage	V_F	I_F=10A	Tj =25℃		0.72		V
			Tj =150℃		0.58		V
		I_F=20A	Tj =25℃		0.80	0.85	V
			Tj =150℃		0.66		V

*Pulse test: pulse width ≤300μs, duty cycle≤ 2.0%.

Typical Characteristics

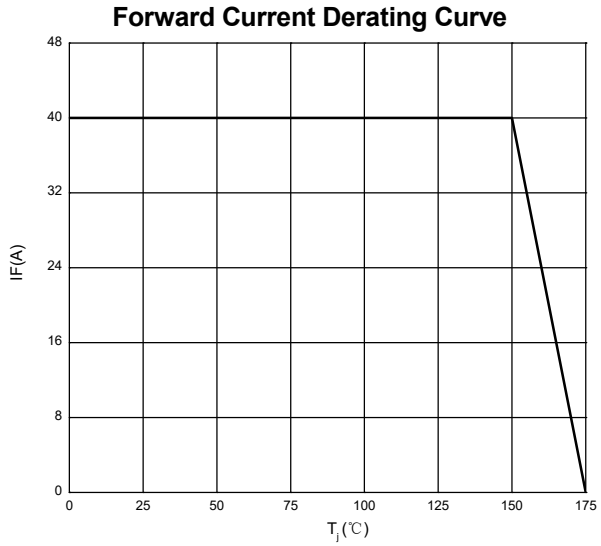

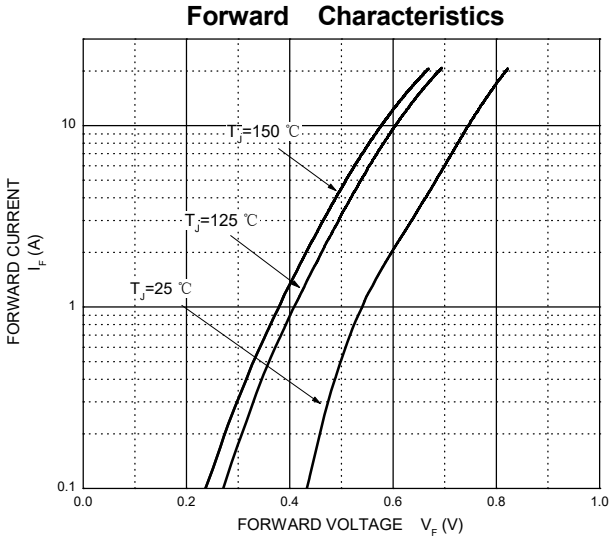

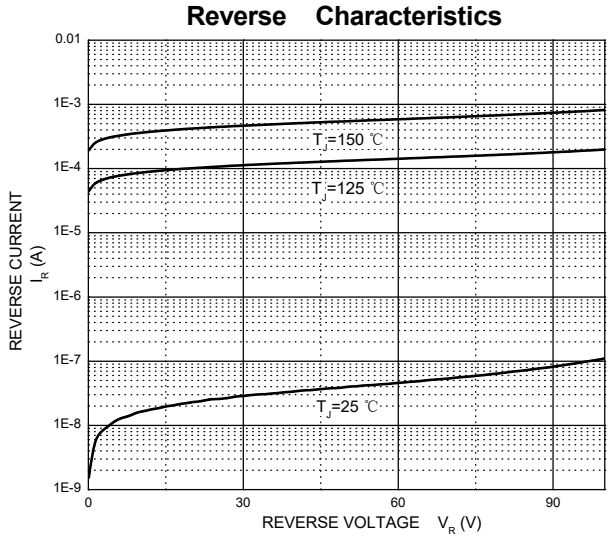

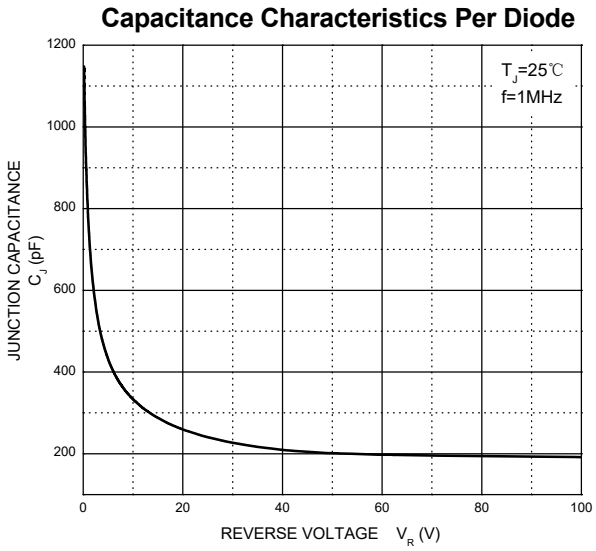

TO-220-3L Package Outline Dimensions

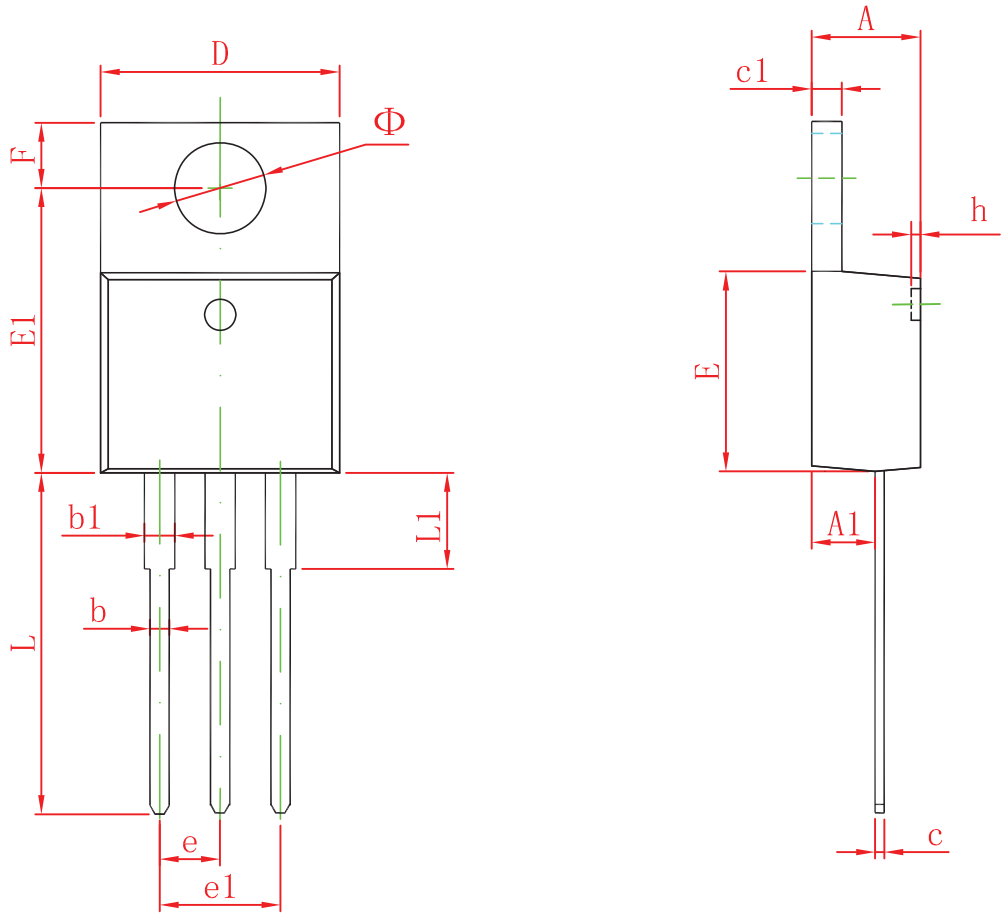

Symbol	Dimensions In Millimeters		Dimensions In Inches	
	Min	Max	Min	Max
A	4.450	4.750	0.175	0.187
A1	2.520	2.820	0.099	0.111
b	0.710	0.910	0.028	0.036
b1	1.170	1.370	0.046	0.054
c	0.300	0.500	0.012	0.020
c1	1.170	1.370	0.046	0.054
D	9.830	10.330	0.387	0.407
E	8.500	8.900	0.335	0.350
E1	12.050	12.650	0.474	0.498
e	2.540 TYP		0.100 TYP	
e1	4.900	5.200	0.192	0.205
F	2.540	2.940	0.100	0.116
h	0.100 TYP		0.004 TYP	
L	13.300	13.800	0.523	0.543
L1	3.540	3.940	0.139	0.155
Φ	3.735	3.935	0.147	0.155

TO-220F-B Package Outline Dimensions

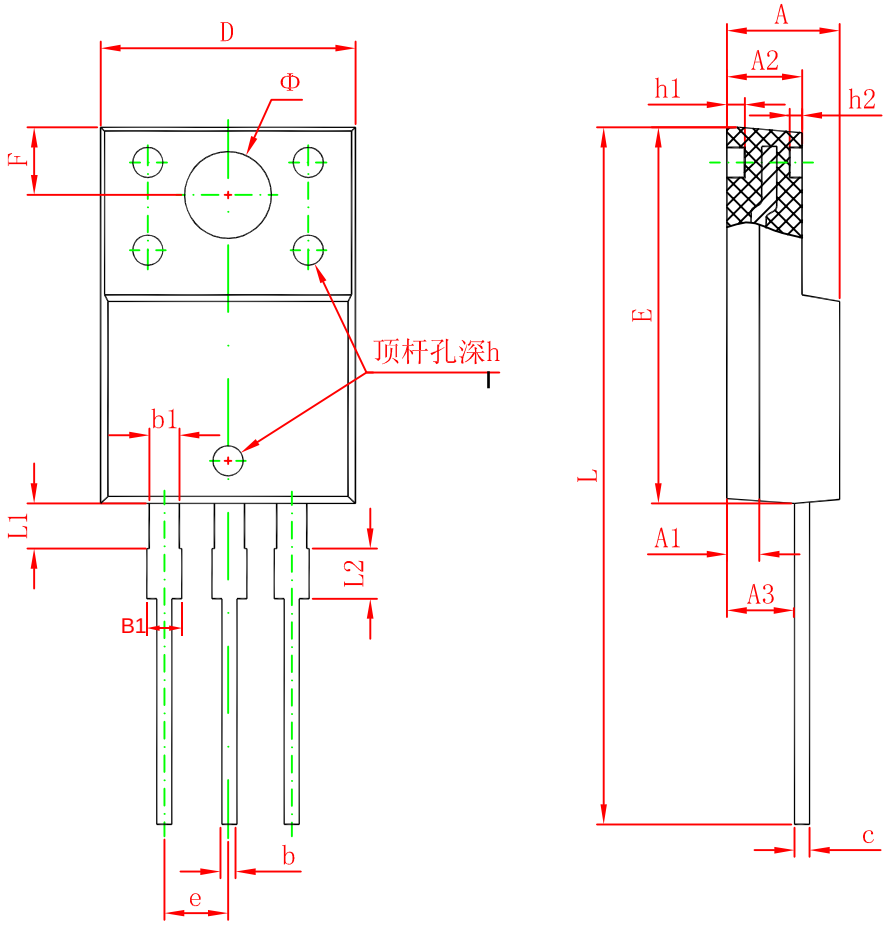

Symbol	Dimensions In Millimeters		Dimensions In Inches	
	Min.	Max.	Min.	Max.
A	4.300	4.700	0.169	0.185
A1	1.200 REF.		0.047 REF.	
A2	2.800	3.200	0.110	0.126
A3	2.500	2.900	0.098	0.114
b	0.710	0.910	0.028	0.036
b1	1.100	1.350	0.043	0.053
B1	1.150	1.400	0.045	0.055
c	0.500	0.750	0.020	0.030
D	9.960	10.360	0.392	0.408
E	14.800	15.200	0.583	0.598
e	2.540 TYP.		0.100 TYP.	
F	2.700 REF.		0.106 REF.	
Φ	3.300 REF.		0.130 REF.	
h	0.000	0.300	0.000	0.012
h1	0.800 REF.		0.031 REF.	
h2	0.500 REF.		0.020 REF.	
L	28.000	28.400	1.102	1.118
L1	2.100	2.400	0.082	0.094
L2	1.300	1.700	0.051	0.066